Specification

Product Name: DC Controller（PIR）

Product Model: MC079D IR2 series

Versions	Release/ change Date	Reason	Publishing
V1.0	2025.03.14		James.Guo

【Product Feature】

- Thimble interface;Earphone interface; Zhaga interface
- 15 meters maximum installation height, suitable for most warehouses
- PIR motion detector for High Bay Lights.
- IP65 design
- Sensor parameters can be adjusted by remote
- High mounting PIR sensor

MC079D IR2 A

MC079D IR2 DI

MC079D IR2 Z

【Parameters】

Input				
Rated voltage	12±1VDC			
Operating Voltage	12V DC			
Ripple voltage	<100mVp-p			
output				
Output signal	0 -10VDC dimming signal			
Sensor parameters				
Detection mode	PIR detection			
Daylight priority	Switch ON	5Lux/15Lux/30Lux/50Lux	100Lux	150Lux
	Switch OFF	150Lux	200Lux	300Lux
Dimming level	10%(1.4-1.6V) 20%(1.9-2.1V) 30%(2.9-3.1V) 50% (4.9-5.1V)			
Detection range (radius)	2-4m (indoor, sensitivity 100%,no direct sunlight to sensor)			
Installation height	Typical 12m (15m Max), see note 1 & 2			
Environment				
Working temperature(Ta)	-20℃-55℃			
Storage temperature	-40℃~+80℃ Humidity: ≤85% (non-condensing)			
Certification standards				
Certified	CE UL-60730-1			
Environmental requirements	Comply with RoHS 2.0 , Reach requirements			

IP Rating	IP65
Other	
Wiring	Thimble interface
Installation requirements	Mount center or side of highbay
Packaging requirements	Clapboard + Carton(K=A)
Net weight	36.5±3g
Lifetime	5years warranty @Ta (indoor)

Note:

1. When ambient temperature approaches the human body temperature range (36℃~37℃/96.8~98.6℉), PIR motion detection will significantly weaken or non-responsive.
2. When ambient temperature or LED tray temperature is higher than 55℃/131℉, false triggering may happen, please try to reduce detecting sensitivity to improve. If stays false triggering, the PIR sensor should not suitable to be used in the space.

【Function description】

☑ON-OFF function	Stand-by Period be set to “0s”
☑2-step dimming	Stand-by Period be set to “+∞”
☑3-step dimming	Stand-by Period be set to “10s/1min/3min/5min/10min/30min”
☑Daylight priority	Remote press DH Mode and Daylight Sensor be set to “5Lux/15Lux/30Lux/50Lux/100Lux/150Lux”
☐Daylight harvesting	N/A

【Product Information】

- Dimension (Unit：mm)

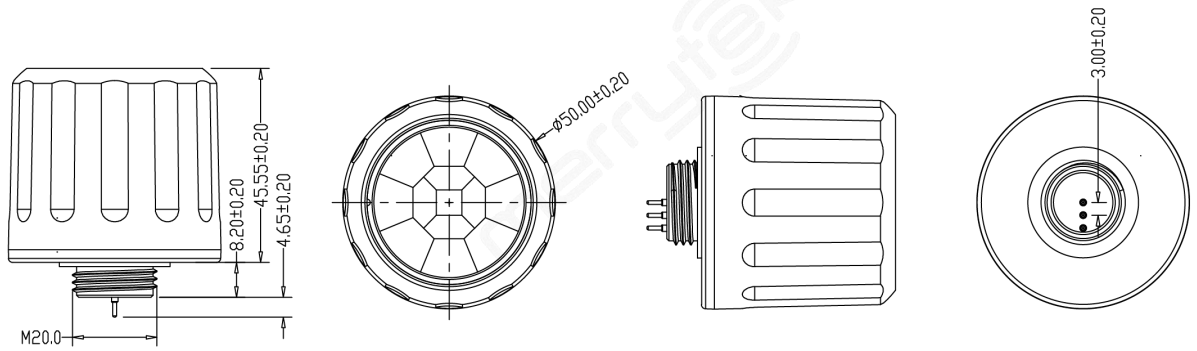

MC079D IR2 A(pin3.0)

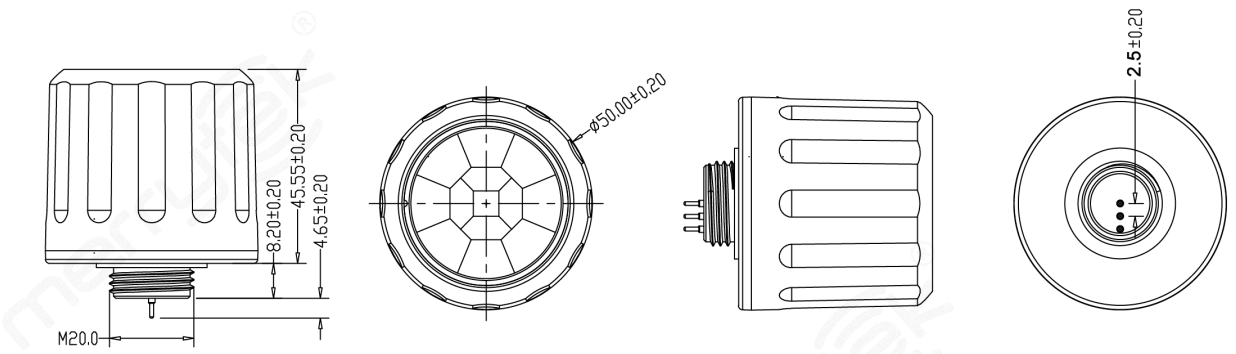

MC079D IR2 A(pin2.5)

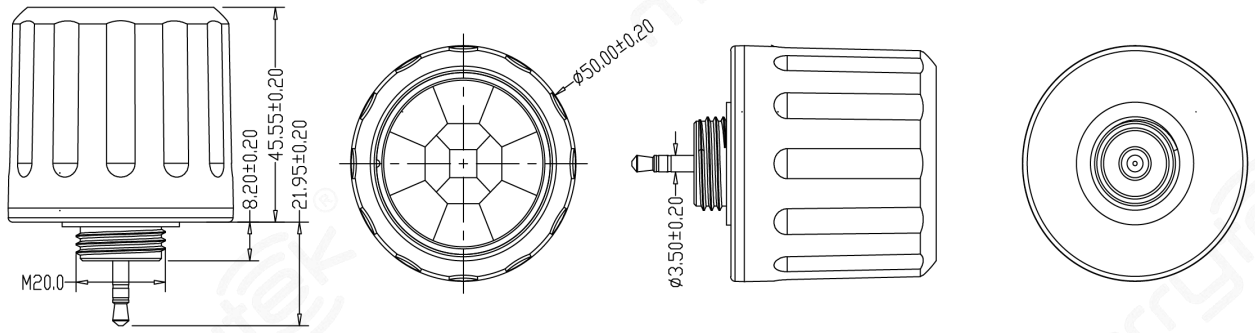

MC079D IR2 DI

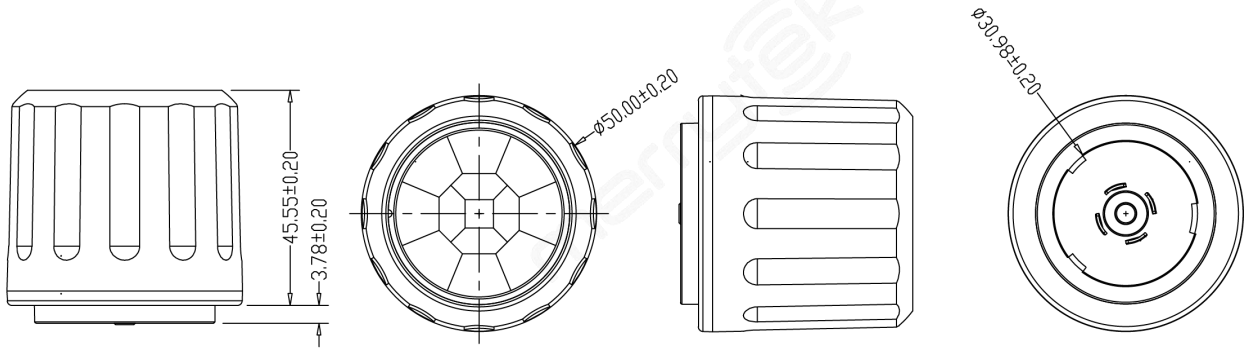

MC079D IR2 Z

- **Function**

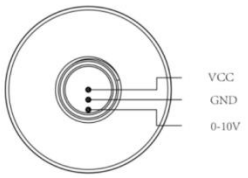

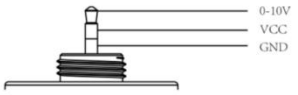

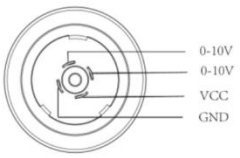

MC079D IR2 A	MC079D IR2 DI	MC079D IR2 Z

- **Wiring**

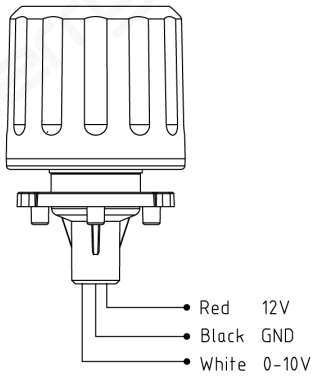

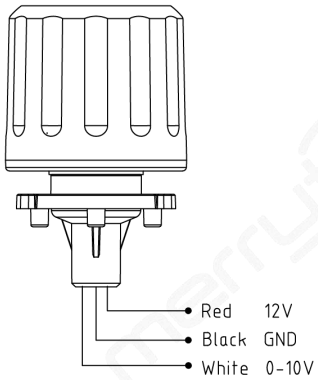

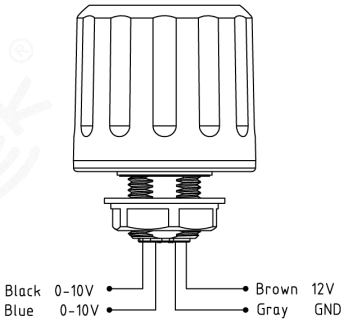

MC079D IR2 A	MC079D IR2 DI	MC079D IR2 Z

- **Installation Instruction**

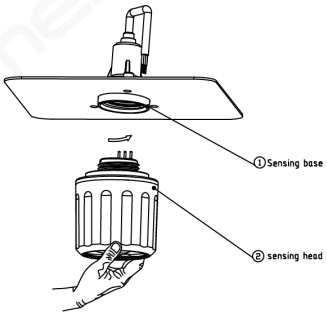

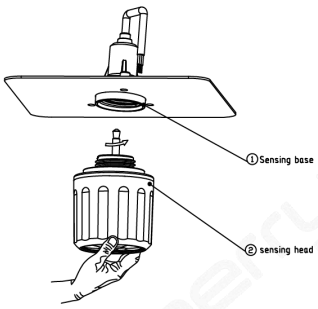

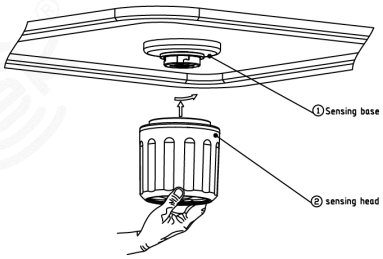

MC079D IR2 A	MC079D IR2 DI	MC079D IR2 Z

【Detection Range】

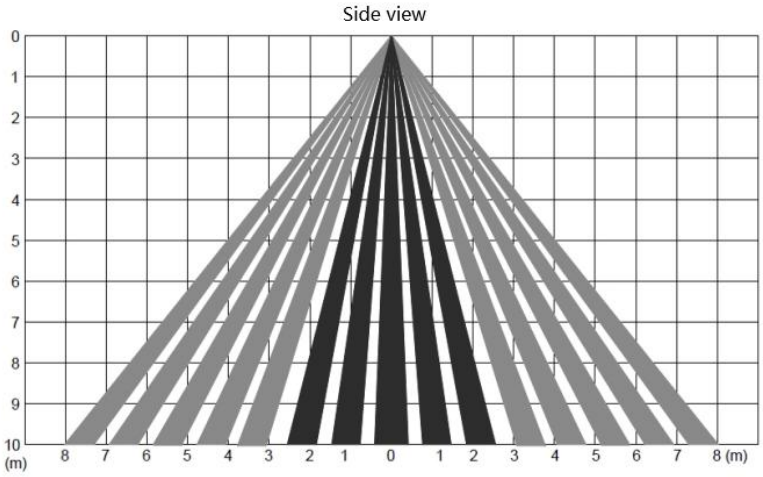

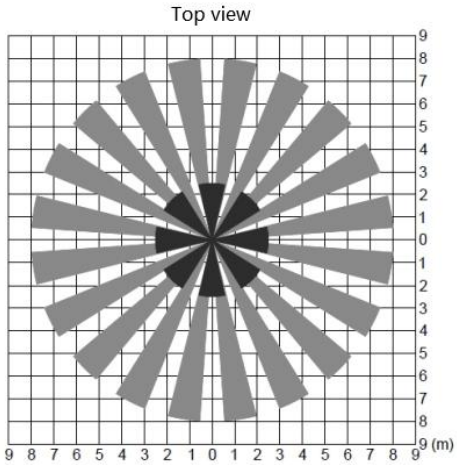

【Remote】

MH10

MH10
Instruction

Remote Control Setting	Button	Remarks
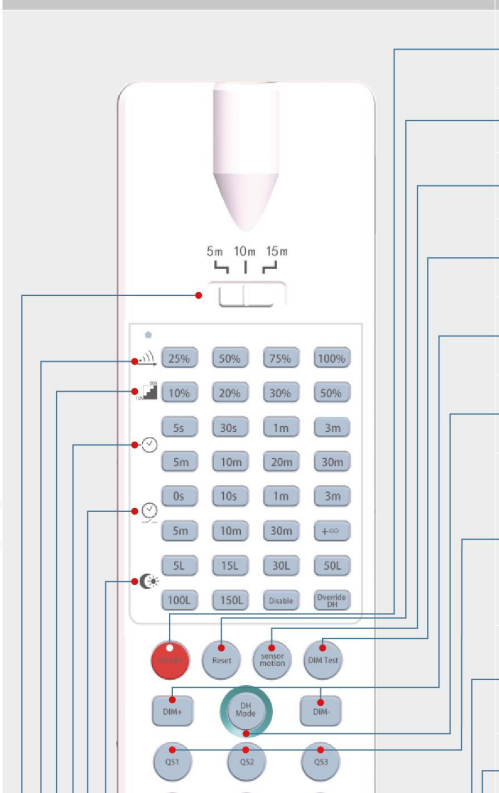	ON/OFF	Press the "ON/OFF" button, the load light enters the normal on/off mode, and the sensing function is disabled. In the normal on/off mode, the "DIM+/DIM-" function can be used to maintain the load light brightness after powering on again. In the normal on mode, the load light enter ON after powering on again. If the load light is OFF, the load light enter ON after powering on again
	Reset	Press "Reset"button, all parameters are same as factory settings.
	Sensor motion	Press "Sensor motion" button, the light quits from the constant on/ off mode,and the sensor starts to work (The latest setting stays in validity)
	DIM Test	Press"DIM Test" button,the 1-10 V dimming works to test whether the10Vdc dimming ports are connected properly.After 2s, it returns to the latest setting automatically.
	DIM + DIM -	Short press to transmit a dimming signal, and the brightness of the lamp will be adjusted with +/-2% each time; dimming range:50%-100 %.(Only available for daylight priority function sensor)Note: In normal ON/Sensor motion mode, the maximum brightness can be set using this button.
	DH Mode	Long press" DH Mode" >3s to enter the daylight priority function; Press "Reset" quit the daylight priority function
	Q1 Q2 Q3	<table><tr><th>Scence Options</th><th>Dection Area</th><th>Hold Time</th><th>Stand-by period</th><th>Stand-by dim level</th><th>Daylight Sensor</th><th>Induction model</th></tr><tr><td>QS1</td><td>100%</td><td>5min</td><td>10min</td><td>10%</td><td>30Lux</td><td>Hs</td></tr><tr><td>QS2</td><td>100%</td><td>10min</td><td>30min</td><td>10%</td><td>Disable</td><td>Hs</td></tr><tr><td>QS3</td><td>100%</td><td>20min</td><td>30min</td><td>10%</td><td>Disable</td><td>Hs</td></tr></table> Note: Users can press any button to adjust parameters, subject to the last setting. When the sensor does not have the above parameter function, the parameter setting is invalid. Hold time, dim level are not applicable to ON/OFF sensor, Sensor mode is not available for low installation sensor.
	TEST 2S	Press the "RESET" and then Press the "TEST 2S" bottom can enter the test mode any time At the mode the sensor parameters as below:Detection Area is 100%, Hold Time is 5s.Stand-by Dim Level is 10%,Stand-by Period is 0s, daylight sensor disable This function only for testing. Quit the mode by pressing "RESET"or any other function buttons.
	HS LS	Press "HS" botton to set the detection area to high sensitivity. Press "LS" botton to set the detection area to low sensitivity. The Induction mode is adjusted at the setting detection area.

【Initialization】

After switch on power,sensor will be warmed 45-60s then start to work.

【Default setting】

Sensitivity: 100%, Hold time: 5s, Daylight sensor: Disable, Stand by period: 0s,Stand by DIM Level: 10%

【Application Notice】

- The sensor should be installed by a professional electrician. Please turn off the power before installing, wiring and changing parameters.
- PIR sensor can’t penetrate any materials, please make sure no obstacle between sensor and moving people/object.
- Sensor may hard to detect people if wear thick clothes in cold winter.
- Heat signals will be regarded as moving signals to trigger the sensor. Avoid facing sensor to air condition or other heating source.
- Sensor is for indoor use only. Outdoor sunlight could affect the detection of sensor.
- Due to continuous improvement, the contents of this instruction could be changed without prior notice.
- The dimming performance could be different when work with different 0-10V drivers.
- The daylight threshold is measured in a sunny environment without shadow and ambient light diffuse reflection. Ambient lux level could be different in different environment, weather, climate, time-of-day

and season.

- Detection distance is related to height of people, mounting height, mounting angle, working environment temperature and etc. When ambient temperature approaches the human body temperature range (36℃~37℃/96.8~98.6℉), PIR motion detection will significantly weaken or non-responsive. When ambient temperature or LED tray temperature is higher than 55℃/131℉, false triggering may happen, please try to reduce detecting sensitivity to improve. If stays false triggering, the PIR sensor should not suitable to be used in the space.

- Given detecting area is typical value that was measured by 165cm high testers in an indoor open environment.

- This product have to use with voltage-stabilized DC power supply whose input voltage is stable and ripple factor is low(ripple factor is lower than 100mV; load current is greater than 25mA).

- When installing in new environment, please install and test at least 5pcs product firstly before mass installation.

- PIR is a pyroelectric infrared sensor that detects changes in infrared rays. Pls pay attention to the following matters during actual use, such as: detecting heat sources other than the human body, the temperature of the heat source does not change or the heat source does not move, and other related environmental factors and violations of the PIR application principle impact.

- When detecting heat sources other than the human body due to the following phenomena, the PIR may be falsely triggered.
  1. When small animals enter the detection range
  2. When far-infrared rays from sunlight, car headlights, incandescent lamps, etc. are directly exposed to the sensor
  3. When the temperature in the detection range changes drastically due to warm air, cold air from cold greenhouse equipment, water vapor from humidifiers, etc.

- When detecting heat sources due to the following phenomena, the PIR may not trigger
  1. When there are substances such as glass and acrylic that block the transmission of far-infrared rays between the sensor and the detection object.
  2. The heat source within the detection range hardly moves or moves at high speed.